SIT 210 TASK 1.1P

1. GitHub Repository link

https://github.com/HollowOWisp/SIT210

2. Tinkercad schematic circuit design

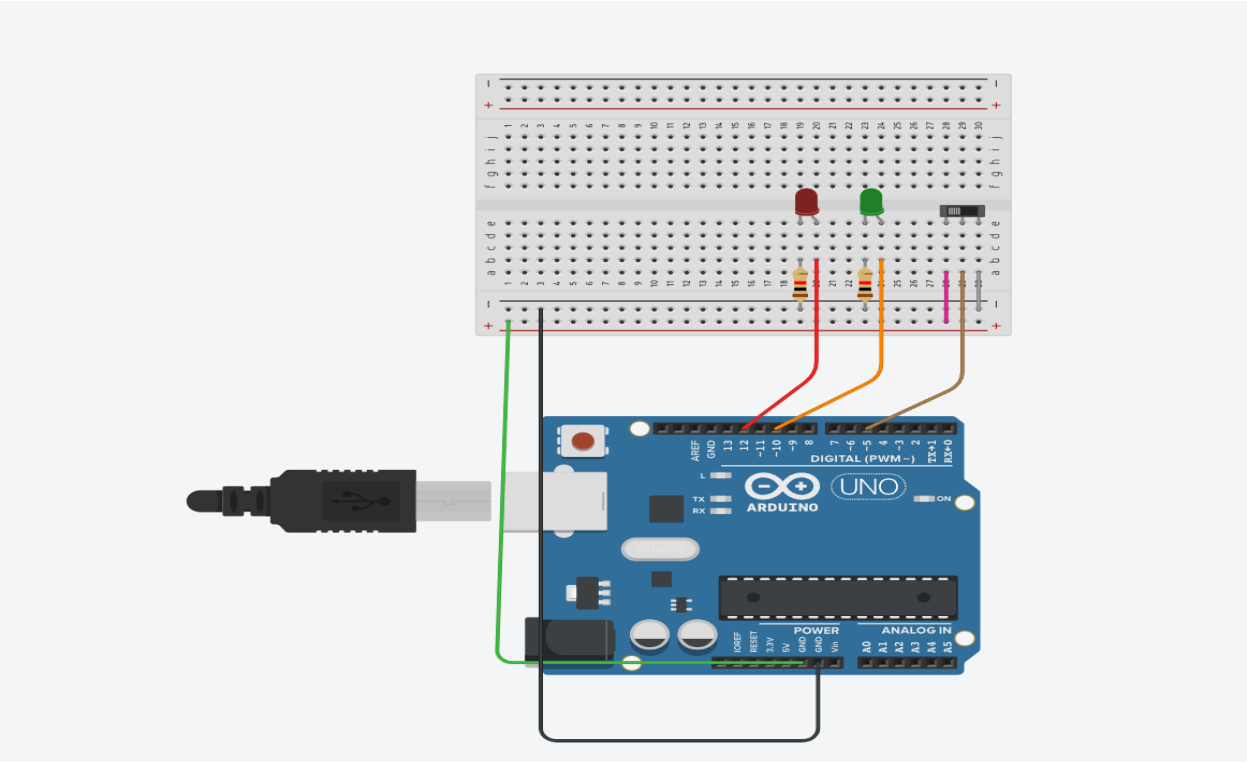

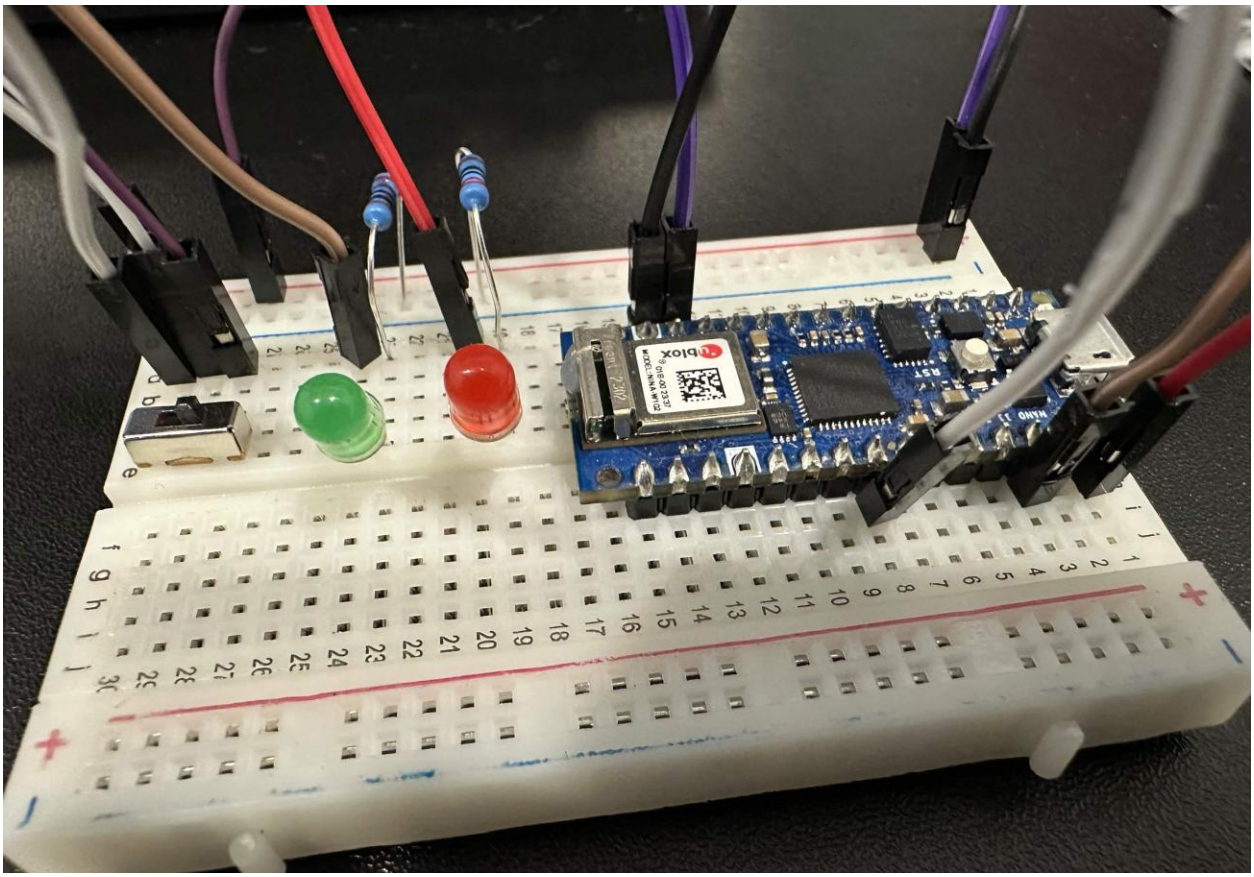

3. Video Link of the Arduino board
https://deakin.au.panopto.com/Panopto/Pages/Viewer.aspx?id=3a729eb6-1490-4623-825e-b41500991806 (before 30s and 60s mark)
https://deakin.au.panopto.com/Panopto/Pages/Viewer.aspx?id=8fd4e779-e667-4711-b2ad-b41500991813 (30 secs blink)
https://deakin.au.panopto.com/Panopto/Pages/Viewer.aspx?id=2c4dec0b-e77f-4cfa-9dcb-b41500991807 (After the 30s and 60s blink)

Discussions

4. Modular Programming

Modular programming was used in the project. This is done by breaking down the program into smaller blocks or functions, which can be reused.

Instead of using the main loop to define all the operations, the program is divided into different functions, each handling a different task.

This makes the program more user-friendly because if a change needs to be made, it will only affect a single part of the program.

An example would be if the time for the hallway light needs to be turned on needs to be increased, the function updateHallwayLight() will need to be changed.

5. Design problems

One problem with the design is that the system is entirely dependent on the user's input. If the user forgets to press the switch, the lights will not be turned on,

Another problem would be if the system was repeatedly activated when the switch is pressed, which may cause the timers to be reset. Where the system does not consider the ambient light when the system is activated, meaning the lights can be activated even when the day is bright.

6. 3 examples of modular programs

1. Motion Sensor Lighting System

A motion detection system could be used to switch on lights when there is movement detected nearby. This would lessen the need for user intervention.

2. Temperature Monitoring System

A modular program could be used to monitor the temperature of a room. This would ensure that the room is comfortable using a heating or air conditioning system.

3. Emergency Alert System

A panic button system could be used. This would ensure the user’s safety in the event of an emergency.